INSTALLATION INSTRUCTIONS
EASY STEP-BY-STEP GUIDE

1 You have received your AIRGO G3 Soft Starter!

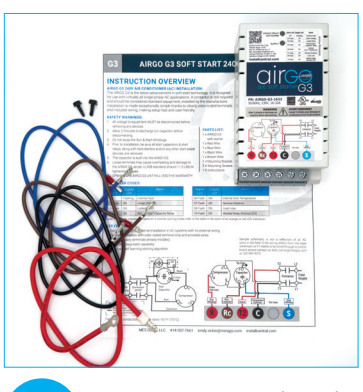

2 Remove parts and read

3 Connect (land) the wires to their terminals.

4 Turn off power to the AC unit at the circuit breaker or disconnect.

5 Open AC unit by removing access cover.

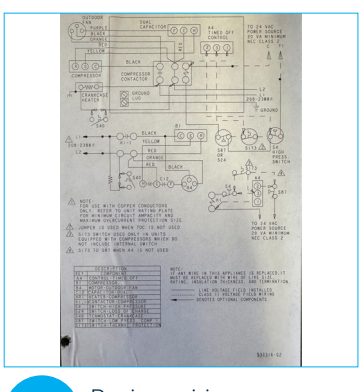

6 Review wiring diagram on the back of access cover.

7 Install mounting bracket, vertical or horizontal.

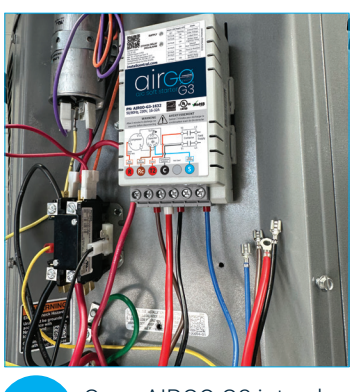

8 Snap AIRGO G3 into place.

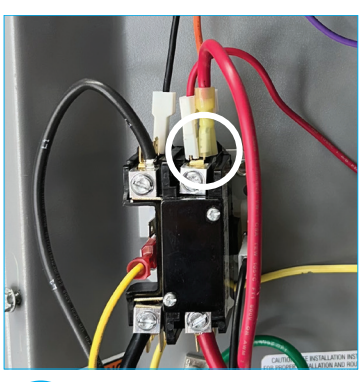

9 Remove compressor run wire (thick red in this example) from the contactor.

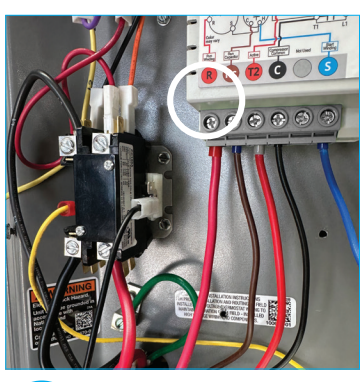

10 Strip the compressor run wire at least 1/2", terminate in run winding terminal of AIRGO G3

11 Remove jumper wire (red in this example) between capacitor and contactor.

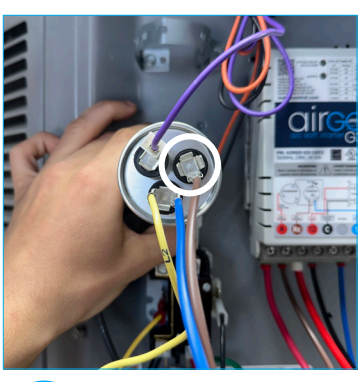

12 Terminate brown wire from AIRGO G3 to "C" on the capacitor.

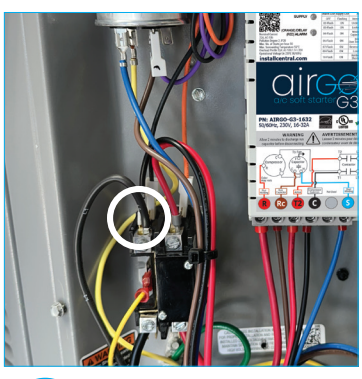

13 Black wire from AIRGO G3 to load side contactor.

14 Terminate blue wire from AIRGO G3 to "H" on the capacitor

15 Red wire from AIRGO G3 Active T2 to load side contactor.

16 Wiring is complete! Your AIRGO G3 is installed.

If you have questions with your install, contact Bob Cramer: bob.cramer@mesgrp.com | 262-893-4375

AIRGO products are compliant to RoHS, REACH, 3TG and SCIP regulations. | Conforms to UL 60947-1 & UL 60947-4-2 | Certified to CSA C22.2 #60947-1 & #60947-4-2

WARNING: Suitable for use on a circuit capable of delivering no more than 5000rms symmetrical amperes, 240 volts maximum, when protected by a non-time delay RK5 fuse or circuit breaker rated 80A, or a time delay fuse rated 70A. The device does not provide current limiting control or equivalent. AIRGO G3 is **NOT** an overcurrent protection device and must **NOT** be used as a replacement for any primary circuit overcurrent protection.

CAUTION: This product can expose you to chemicals including Bisphenol A and Ethylene Glycol, which are known to the State of California to cause cancer or birth defects, or other reproductive harm. For more information, go to www.P65Warnings.ca.gov.

AIRGO G3 must be installed in a location that ensures that the external heat from a hot gas line, compressor discharge piping, or similar heat source will **NOT** cause damage. Minimum 3" (76 mm) clearance is recommended. AIRGO G3 must be installed by qualified/licensed technician.

G3 **AIRGO G3 SOFT START 240V**

APPLICATIONS
- Residential AC
- Commercial AC

INSTRUCTION OVERVIEW

AIRGO G3 240V AIR CONDITIONER (AC) INSTALLATION:

The AIRGO G3 is the latest advancement in soft start technology. It is designed for use with virtually all single-phase AC applications. A contactor is still required and should be considered standard equipment, installed by the manufacturer. Installation is made exceptionally simple thanks to clearly color-coded terminals and included wiring, making setup fast and user-friendly.

SAFETY WARNINGS:

1. All voltage to equipment MUST be disconnected before removing any devices.
2. Allow 2 minutes to discharge run capacitor before disconnecting.
3. Do not swap the Run & Start Windings.
4. Prior to installation, be sure all start capacitors & start relays, along with hard-starters and/or any other start-assist devices, are removed.
5. The capacitor is built into the AIRGO G3.
6. Loose terminals may cause overheating and damage to the AIRGO G3, as per UL508 standard, ensure 11.5 LBS-IN tightening torques.
7. OPENING THE AIRGO G3 UNIT WILL VOID THE WARRANTY!

PARTS LIST:

1 x AIRGO G3 soft starter
1 x Red Wire
1 x Blue Wire
1 x Black Wire
1 x Brown Wire
2 x Ferrules
1 x Mounting Bracket
2 X Mounting Screws
1 X Instructions

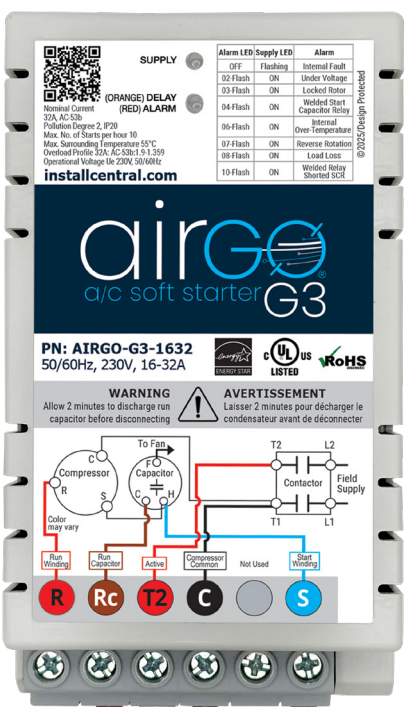

LED FLASH CODES:

Alarm LED	Supply LED	Alarm
OFF	Flashing	Internal Fault
02-Flash	ON	Under Voltage
03-Flash	ON	Locked Rotor
04-Flash	ON	Welded Start Capacitor Relay
06-Flash	ON	Internal Over-Temperature
07-Flash	ON	Reverse Rotation

Note: LED Flash codes: Orange LED: Supply LED ON (Green), Delay LED ON (Orange) = delay between starts. Wait for maximum 3 minutes (with contactor engaged) for delay to be over.

KEY FEATURES:

- Compact design for internal installation in AC systems with no external wiring
- Easiest installation with color coded terminal strip and provided wires with necessary terminals already installed,
- Expanded diagnostic capability
- Improved self learning starting algorithm

Sample schematic is not a reflection of all AC units in the field. If the wiring differs from the base schematic or if it needs to be wired through a control board, please contact us: bob.cramer@mesgrp.com or 262-893-4375

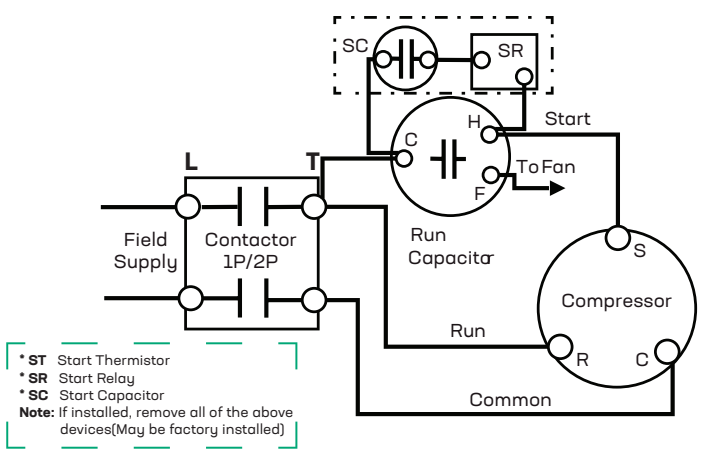
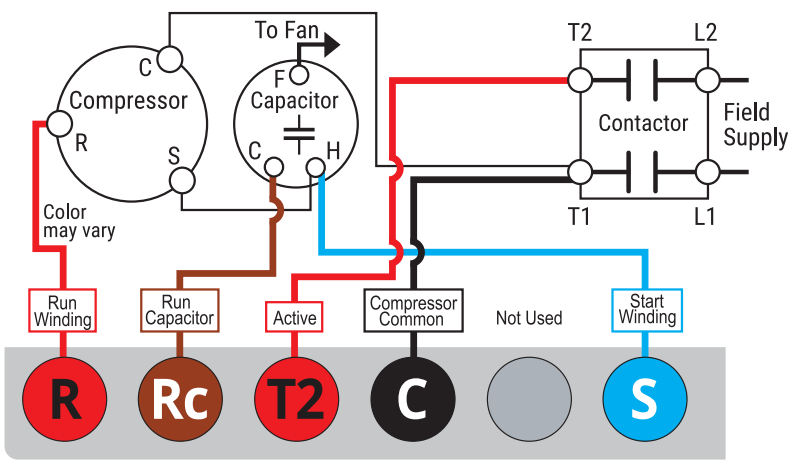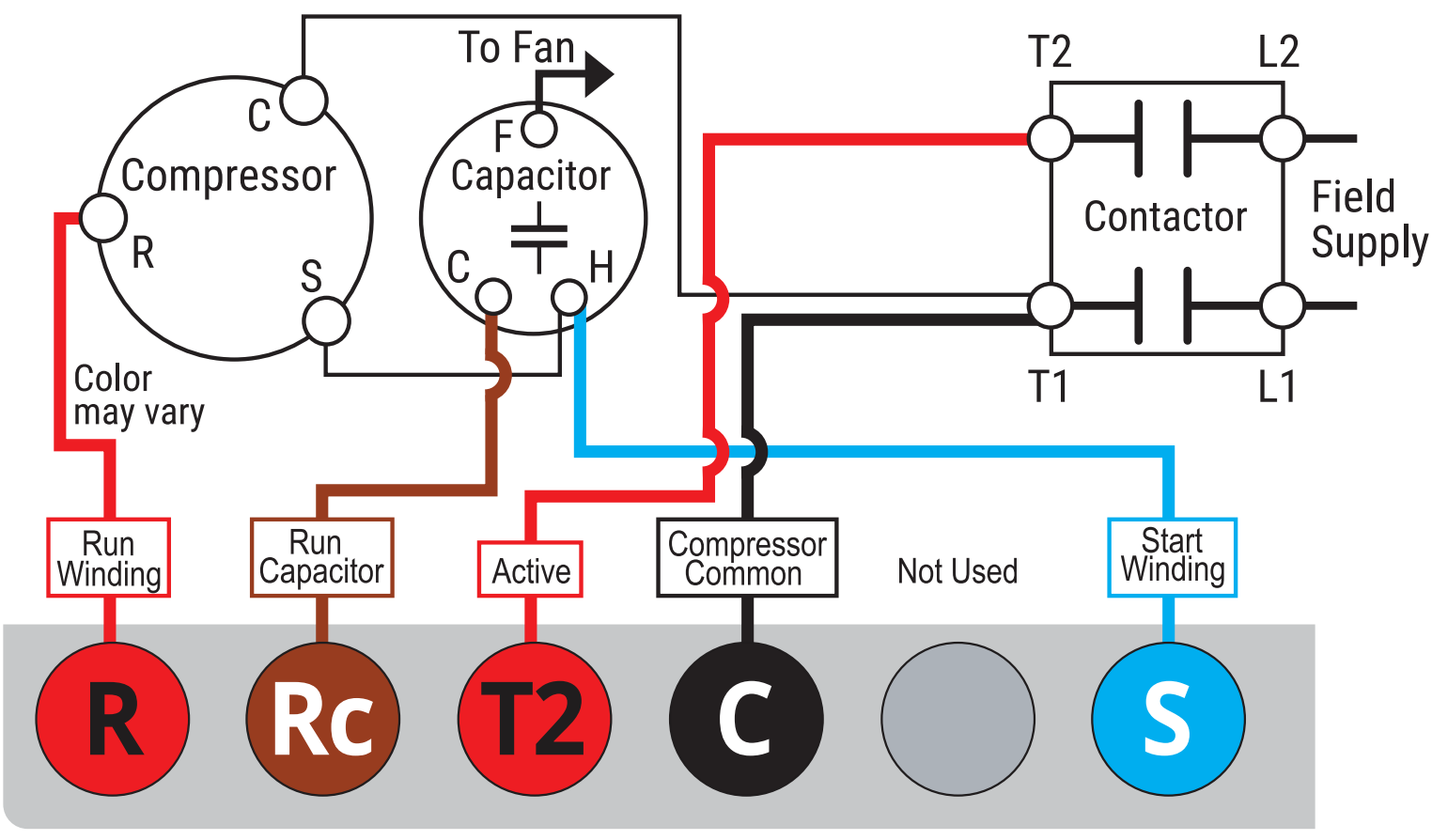
Field wiring conductors shall be rated 167°F (75°C)